ANEST IWATA

LPH80

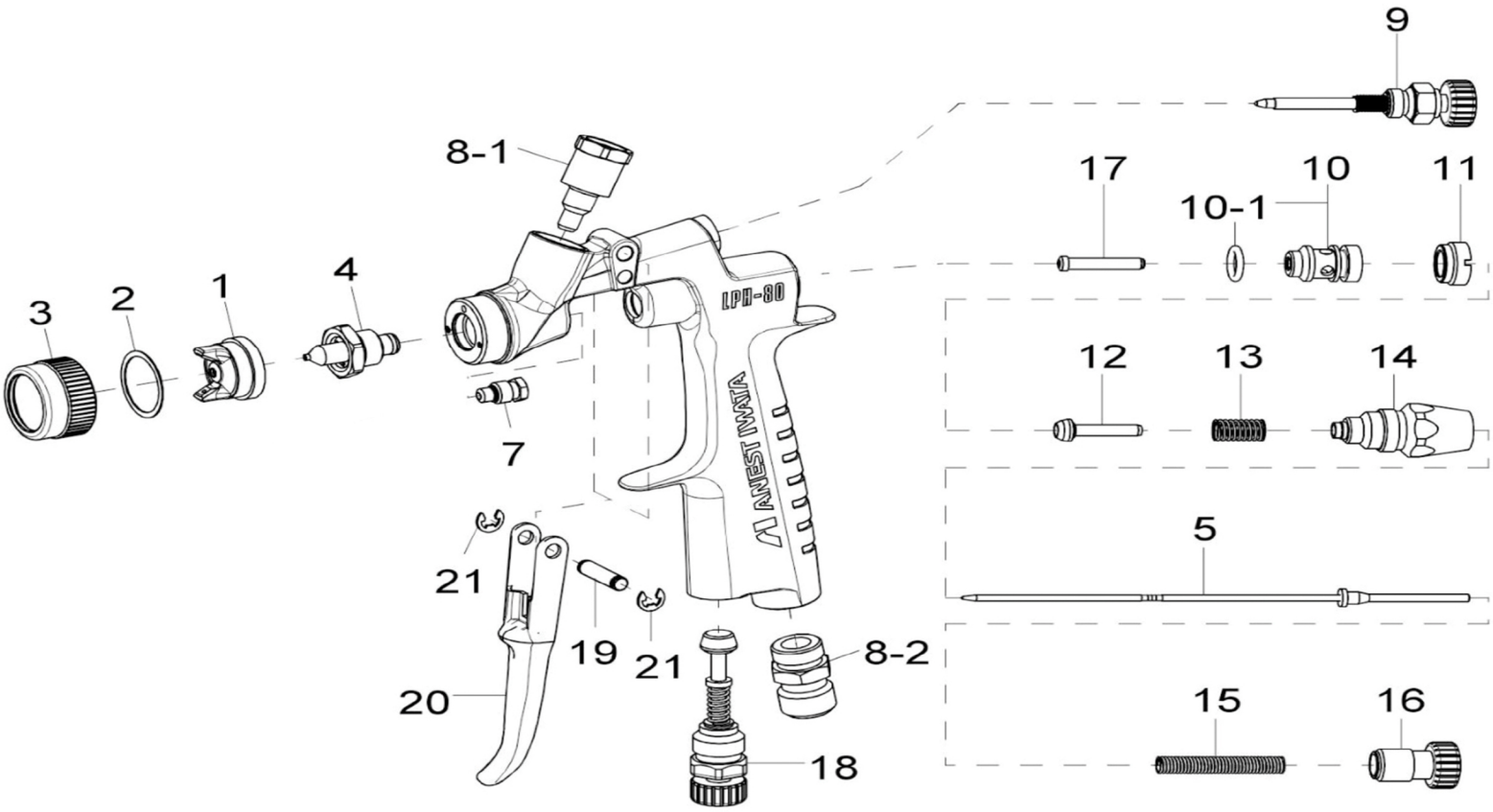

REF#	PART #	DESCRIPTION	REMARKS
1	93557600	AIR CAP	0.4/0.6/0.8/1.0/1.2
1	93662600	AIR CAP "LPH80-E4"	1.0/1.2 (Wider Pattern)
2	93558600	AIR CAP GASKET	
3	93559600	COVER RING	
4	93570600	FLUID NOZZLE 0.4	MARKED AS L50/04
4	93568600	FLUID NOZZLE 0.6	MARKED AS L50/06
4	93761530	FLUID NOZZLE 0.8	MARKED AS L80/08
4	93560600	FLUID NOZZLE 1.0	MARKED AS L50/10
4	93760530	FLUID NOZZLE 1.2	MARKED AS L80/12
5	93891600	FLUID NEEDLE 0.4	MARKED AS I
5	93890600	FLUID NEEDLE 0.6/0.8	MARKED AS II
5	93886600	FLUID NEEDLE 1.0/1.2	MARKED AS 111
7	93940890	NEEDLE PACKING SET	
8-1	93753530	FLUID NIPPLE 1/8"	
8-2	93660300	AIR NIPPLE 1/4"	
N/P	93538600	GUN WRENCH	

REF#	PART #	DESCRIPTION
9	93748530	PATTERN ADJUST SET
10	93912880	AIR VALVE SEAT SET
10-1	96638005	0 RING
11	93011880	AIR VALVE SEAT SCREW
12	93013880	AIR VALVE
13	93012880	AIR VALVE SPRING
14	93936880	FLUID ADJUST GUIDE SET
15	93015880	FLUID NEEDLE SPRING
16	93754530	FLUID ADJUST KNOB
17	93006880	AIR VALVE SHAFT
18	93845531	AIR ADJUST SET
19	93167890	TRIGGER STUD
20	93162890	TRIGGER
21	93912030	STOPPER
N/P	2860	REPAIR KIT (Includes Ref# 7,10-1,21)
N/P Not Pictured		2018 EDITION